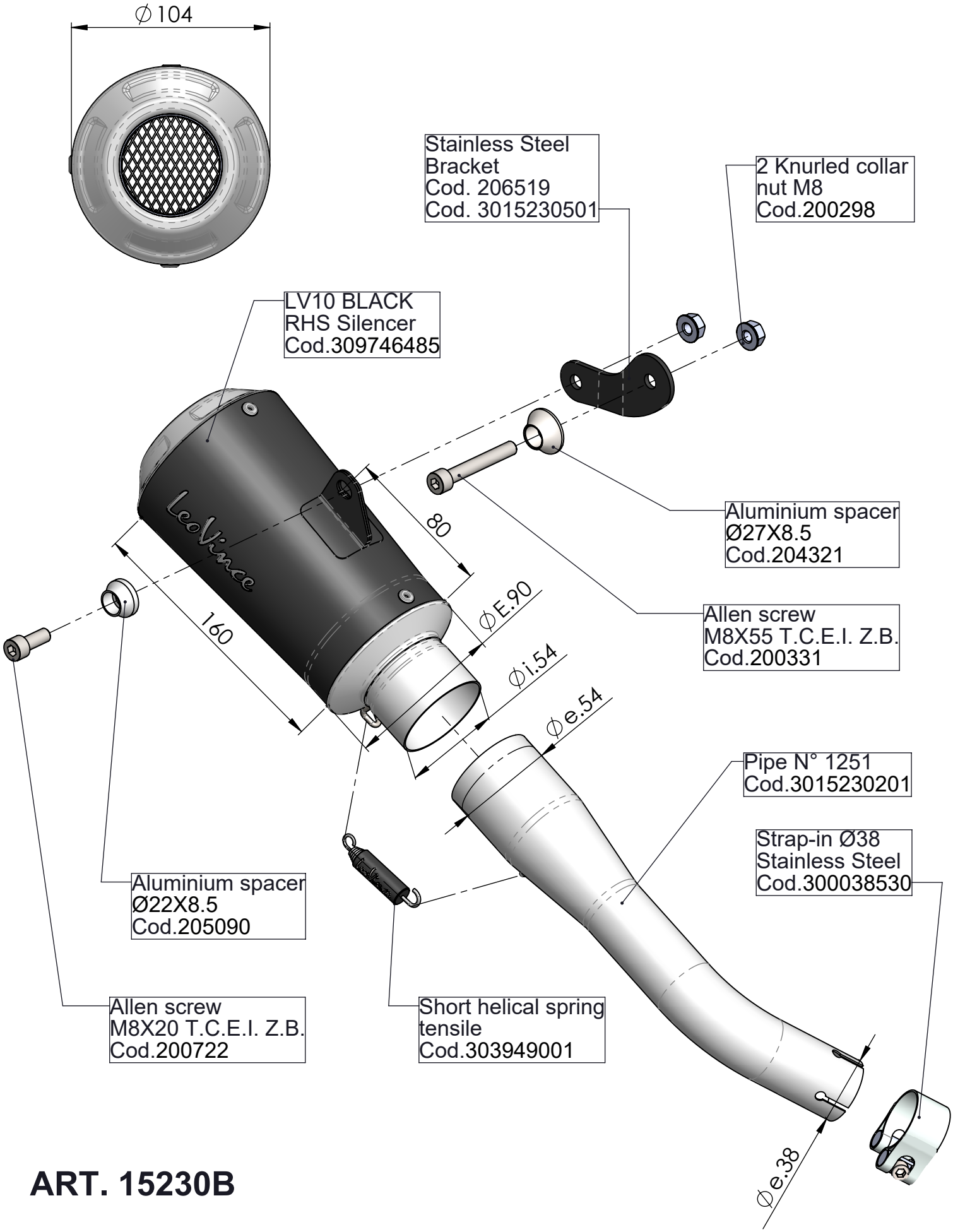

ART. 15230B

KAWASAKI NINJA 125 - Z 125

SLIP ON - LV1O - BLACK