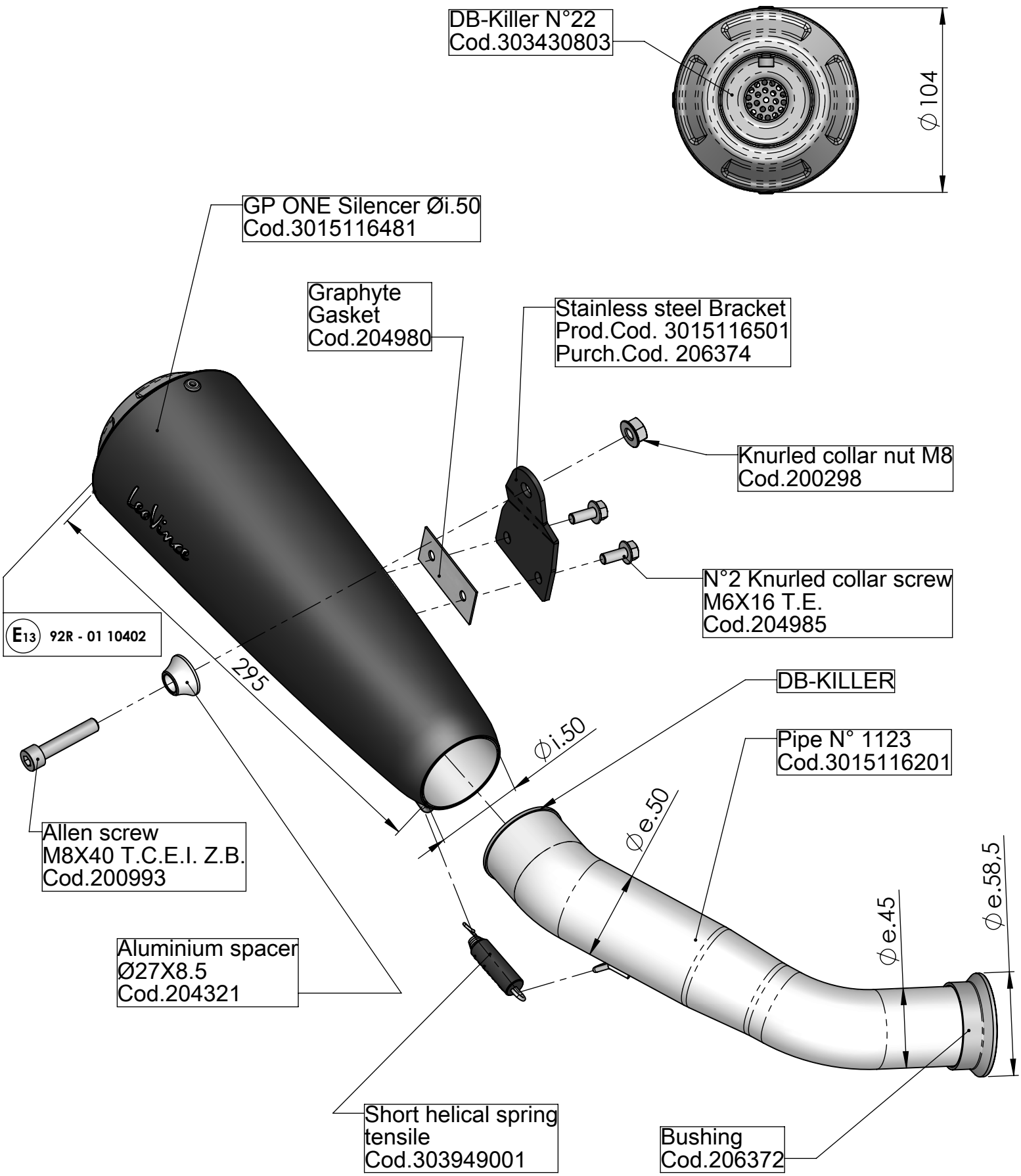

Art. 15116

KTM RC 125 - DUKE 125 - RC 390 - DUKE 390 '17

Slip-on - GP ONE - APPROVED